Quarter Scale Racer

Presents

THE BLACK BOOK

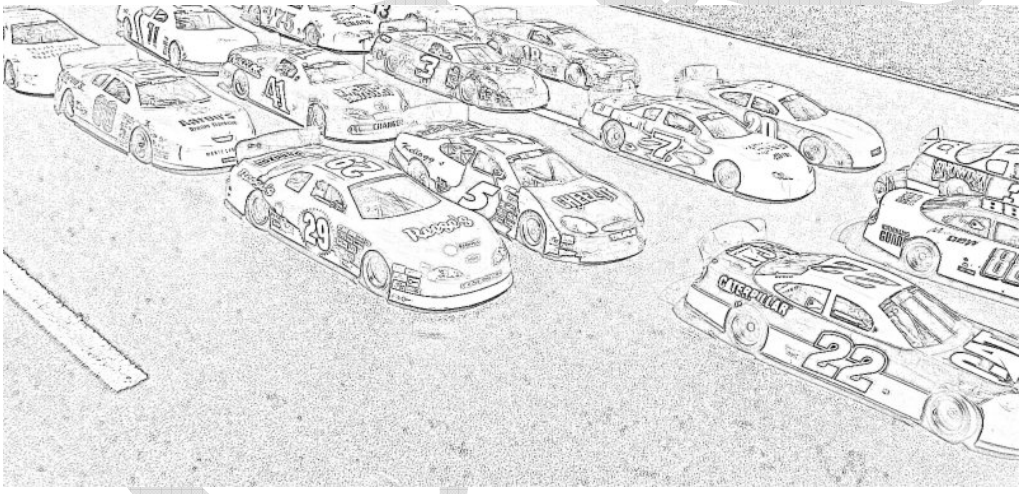

Quarter Scale Racers are often looking for ways to improve their Racing Skills and Setup Techniques. Many quarter scale racers have turned to Full Scale Stock Car Articles with hopes of finding useful information to use on the Quarter Scale Car. Though the Full Scale information is relative, it does not give the average racer the Scaled Version and Technical information needed. This book will do it's best to provide Ideas, Suggestions, and Technical information that apply to a Quarter Scale Race Car. Most of this information is compiled from Quarter Scale Racers from across the country. Keep in mind, each racer has a unique driving style of his or her own. Therefore, results may vary from racer to racer. The information in this book is just one of many tools used in quarter scale to help racers progress in their racing.

Quarter Scale R/C – New Racer's Guide

I recommend going to your local track to talk to the operator and racers. The visit can yield good information pertaining to classes, rules, schedule and possible equipment for sale.

Many racers choose to buy a used Quarter Scale to see if they like the hobby before diving in over their head. I believe this is the best approach to anyone that has not raced in R/C. There are a lot of advantages to buying new but many racers have taken used equipment and been very successful. The goal is to find good used equipment for entry level racing. You will need to learn setting it up and repairing it. Get as much track time as possible to become a better driver. Get a good season under your belt then move up to a new car if you like.

Buying Used – Used cars can range from just a few hundreds dollars well over a thousand. This depends on the year, the shape it's in and how complete the package will be. You should first ask around the local track to find a local used car for sale. If the car has been raced local, you can get more useful information about it from the owner and other racers. Plus, you can actually see what is there. The other options are finding one online or in the classifieds.

No matter which route you take, be sure you ask questions about it. If the owner is really interested in selling, they will take the time to give you information about it.

I will mention this; you don't have to buy the first car you come across! Before you seal the deal, just be sure that you are completely satisfied.

You should also consider shipping charges if buying from out of town. UPS & Postal charges are outrageous these days. Maybe the seller will meet you in the middle? Ask...

General questions to ask the owner

- *Has this chassis ever been seriously bent*
- *Has the chassis ever needed welding to repair it*
- *How old is the engine*
- *When was the last rebuild on the engine*
- *How many races are on it after rebuild*
- *How many times has the engine been rebuilt - was work done by a qualified builder*
- *Are there any extra parts, tires & equipment such as fuel bottle, shock oils, charger...ect*
- *Does it come with a radio, receiver & battery*
- *What exactly is it going to take to get the car track ready*

Buying New – Buying a new roller chassis with engine, you have to consider other expenses to get it track ready. You will need a radio, body & paint.

In order to buy your new chassis you must determine the manufacturer you would like to represent. Some mfg's are better known than others but that does not mean they are always the better choice. New cars range from $1300 to $2200 depending on the mfg & how complete you want it. There are no sites on the web that have a buyers guide for quarter scales. You will have to rely on local racer suggestions or through

discussions with the builder. Steer clear of discussion forums. You will get a ton of suggestions that may only confuse you further.

When discussing a purchase from the mfg, ask many questions and let them know your concerns. They are in the business of answering buyer questions. If they don't offer satisfactory customer service, then move on. Don't waste your time and money where it's not appreciated.

General questions to ask when discussing a new purchase

- *What accessories are included*
- *Is the chassis a roller (will I need to buy tires)*
- *How far along on the build is the car*
- *What will I need to complete the car*
- *Do you carry all replacement parts*
- *Will I be able to contact you for setup help*

Once you have purchased your new (used) ride, its time to start thinking about spare parts. Extra heim joints and a few tires are a must. Also you will need to gather up tools and other support equipment as mentioned above in the *used* discussion.

Tools & Equipment

Now that you have a car, you'll need to get it ready for the track. Getting on the track & making laps is the number one goal here but an important first step is to gather up some needed tools. I have plenty of tools myself but it seems like the one I need at the time is the one I don't have. So, make a list and add to it as you go. Don't worry too much if you can't get everything upfront. There will be fellow racers willing to loan you just about anything you'll need. Just remember to return the favor later! Some tools & useful items can be found listed below. These are items to have at the track which have been suggested by quarter scale racers from around the country.

Recommend Tools

- Cordless drill, drill bits & nut drivers
- Wrench Set - (1/4" - 9/16")
- Ball End Hex Wrenches (SAE & Metric)
- Small Crescent Wrench
- Nut Driver Set
- Screwdrivers - Phillips & Flat (small to medium sizes)
- Needle Nose & Channel Lock Pliers
- Tape Measure
- Duct Tape
- Assorted Zip Ties
- Vise Grip Pliers
- RPM Monster Camber Gauge (Tower Hobbies)
- Duct Tape

Spare Parts

• Heim Rods (several RH 1/4) & few 3/16 (LH & RH)
• Spare Tires
• Bearings
• Spacers (can be made of aluminum rod or delrin)
• Washers (various sizes)
• Spark Plugs
• Gears (not a must but an option that you will eventually test)
• Assorted nuts and bolts

General Equipment

• Complete Radio (PCM or 2.4ghz)
• Economy Charger for radio receiver battery (Tower Hobbies)
• Long Extension cord
• A 48" table or a stand
• If you don't have an enclosed trailer, then get an EZ-UP 12' x 12'
• 1 gal fuel jug & Fuel Bottle
• Two-stroke oil ratio mixing cup (from a motorcycle shop)
• Cordless drill, drill bits & nut drivers
• Setup Sheets

Go Over the Chassis

Now that you have an idea of tools needed, it's time to turn our attention towards your chassis.

Quarter scale cars whether they be new or used can be purchased in many different stages of completion. Without knowing what stage you have, we'll start from the ground and work our way up.

If you bought new, we will assume the mfg was kind enough to assemble the car with a setup that will work at your track.

If you bought used, then the car will need a thorough going over. It is possible the car is in good condition and the seller even gave you a decent base setup. Nevertheless, going through the chassis will give you that peace of mind plus it will help you learn how to adjust & repair in the future.

I have been told by racers and have read articles to always tear a used chassis down to the bare-bone and go through it. But if you have never worked on a 1/4 scale, you might get things crossed if you strip it down. So, work on one corner of the chassis at a time. Mark <u>everything</u> that you remove. I have even taken digital pictures oh my chassis before tear down just to be sure I put items back in the right direction. Measuring and marking on a note pad is another good idea. When going over the parts, use a pre-race check list for reference of areas to be checking. Double check all fasteners to be sure they are tight before heading to the track After a few weekend sessions of working & tweaking on the chassis you will become comfortable with it. At that point, a complete teardown will not faze you.

Baseline Setup

These steps are intended to help new racers with the basic setup their chassis. Not all actual settings can be provided due to the difference in the mfgs, tracks and classes. Some baseline settings are recommended below to get you in a starting range. Asking a racer from the local track for a basic starting point on setup may or may not yield good information? After all, these guys will be your competition. Setup steps will be cover later in this article.

1. **Choose Tire Size -** When setting up a chassis make sure to use the tire you will race/test to be sure that any other measurements taken are relative to how the car will be raced. The front will use 0" to 1/4" stagger. The rear will normally be set with "1/2 to 1" stagger. If you are not sure which tire to start with, ask a local racer or contact Todd at BRP. Either will be able to help you get close on the tire choice for the track and temperature conditions.

2. **Adjustments -** Adjustments should be made with the front sway bar disconnected. Later on you will reconnect/set the sway bar after adjustments are complete. If you were to make adjustments while the sway bar is connected, you will be binding up the front-end which defeats the change.

3. **Set Approximate Ride Heights -** Put the car on a level flat surface and then set each corner to the height you want it in race trim. Even though this step will be repeated later it is important to do it now at this point also to ensure the next steps are accurate. Ask a fellow racer where his height settings are on average. Comparing ride heights with other racers may not always be an apple to apple comparison but it will make sure your process is consistent with the track you will be racing on. If you cannot get answers from another racer, I recommend you start at 9/16” to 5/8” on the front and 5/8” to 3/4” on the rear.

4. **Square the car -** This is done by taking off the wheels and measuring from the lower chassis rail out to the hub or setup plate. While some setups result in the rear being slightly out of square, for a baseline start with it parallel to the lower chassis rail. Be sure to use a straight edge to your level surface for references to make sure your measurements on each side are consistent. Adjust your rear radius rods and front trailing arm accordingly to put the axle square.

5. **Set Camber -** Camber can be set with a camber gauge or an angle finder. Use an angle finder to measure the angle from the top of the spindle bolt to the bottom parallel to the length of the car front to back. Right front caster is usually set somewhere between 2 and 5 degrees. Caster is adjusted most often by shortening or lengthening the upper or lower Heim rod. Tiny adjustments make a big difference.

6. **Set Front Toe -** The Toe-In / Toe-Out is set next so that the front wheels are parallel with each other while the car is in the alignment bars or has the wheels on it on a level surface.

7. **Final Ride Heights -** With all the wheels back on the car and back on your level surface re-measure to make sure each corner of the car is set to the desired height. At this point, you should depress the suspension a couple times until it rebounds fully. Now you can reconnect/set the sway bar.

8. **Practice -** Its now time to put the car on the track. Allow the tires to heat up a bit before you let it rip. Be sure to check tire temps and wear about every ten to twenty laps during the first practice season. If tire temps and wear are satisfactory, start running mock 25-50 lap heat races. Have someone use a stop watch to check your lap times. Practice, practice, practice. The more laps you get on the track, the better your handling and setup skills will improve.

Setup Steps

Adjustments

Assuming that all parts are install correctly and the rear-end is square with the chassis, the information below can serve as good adjustment references. It is good practice to make one adjustment at a time to get positive feedback of the effectiveness. If you make more than one change it can lead to negative/false feedback of whether or not the change made the car's handling better or possibly even worse.

Use a setup sheet or blank paper to keep track as you make changes to the car. If the change is counter productive, change it back to the original setting while making notes as you go. Keep in mind, the track & weather conditions along with inconsistent driving styles can lead to ill handling cars. A driver using consistency throughout the run is very important. Smooth throttle & steering inputs during long practice runs will give good indications of how your setup is working.

- Adjustments should be made one at a time to insure positive feedback
- Front-end changes should be made with the sway bar disconnected
- Reset the sway bar after adjustments are complete
- Actual track testing will improve a driver's learning curve.

Front-end Toe

Toe is the pointing in or pointing out of the front wheels as viewed from the top of the car. If the front wheels point in at the front edge of the wheels then you have toe in. If the front wheels point out at the front edge then you have toe out. This helps in steering stability.

- Typical toe settings for 1/4 scales are between 1/16" to 1/8" out.
- Changing the ride height and camber settings will affect toe.
- Check toe settings after each race if you have contact with another car or the wall.

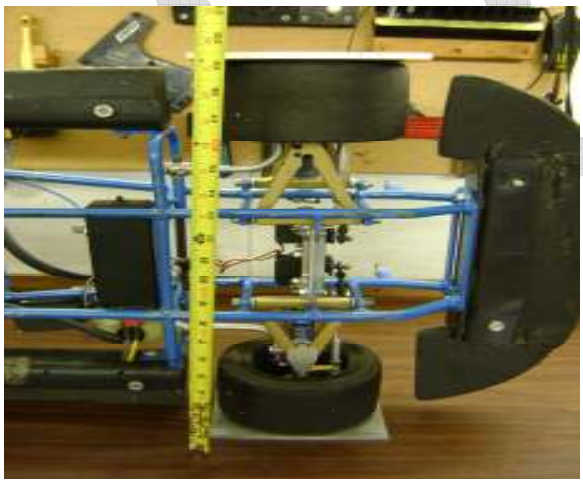

Picture provided by Johnson Motorsports

Rear Alignment (Squaring the rear with the chassis)

The best way to square the rear end is to set the chassis on a flat, level surface such as a counter top or table. If you have setup plates, install them as they will make the process much easier. Once you have the chassis setting on the described surface, measure from the bottom frame rail to the backside of the RR tire or plate. You want the front and rear of the tire or plate to measure the same distance from the bottom frame rail. Once you have made sure the rear is square, you can now work to get the RF & RR parallel with the chassis. You do this by placing a straight edge or string down the right side on the chassis alone the center of the hubs. If you are not using plate, the edge or string will be pressed against the outside of the tires. Now look down the right side of the chassis to be sure the right side line is parallel with the chassis bottom rail. Once the right side is set, you can work on the left side. Be sure you stay within the track width rules.

Camber

Camber is the lean of the tire as viewed from the front of the car. If the top of the tires lean toward the center of the car then you have negative camber. **/-----**

If the top of the tire tilts out away from the center of the car then you have positive camber. **\-----/**

Camber adjusting effects tire wear, the cornering of the car and corner speeds.

Unlike full scale stock cars, our cars have the capability of enormous rear camber adjustments due to a dog bone rear-end setup.

Camber is easily measured with a camber gauge. The RPM Monster Camber Gauge & typical magnetic degree gauge are two such gauges to choose from. The RPM gauge can be used in junction with setup plates or placed against the tire itself. Notice the setup plate used in this picture. The magnetic gauge can be used with or without a steel setup plate.

The RPM gauge is available from Tower Hobbies. Link will take you directly to the part.

The magnet gauge is available from Harbor Freight Tools. Link will take you directly to the part.

To achieved proper camber adjustments read tire temperatures regularly. When camber is set correctly it allows the entire surface of the tire to adhere to the track thus maximizing the use of the tire contact patch when taking a corner at high speed.

Marking the tire with lines from a grease pencil is another way to check whether or not your camber settings are good. Markings in a pattern such as the tire to the right will take about 15 to 25 laps around the track at speed. Now, when you bring the car back in,

you will look for the remaining pencil markings. This will give you good indications of how much of the tire is in contact with the track ... otherwise known as *tire contact patch*. When camber is set properly, the entire patch of the tire should be in contact with the track in the turns.

Points to remember...

- Always check the toe when adjusting Camber
- Reset the front sway bar whenever making changes
- Set Camber should be determined by on track testing
- Optimal Camber setting will result in faster corner speeds and ideal tire wear
- Improper Camber settings will result in ill car handling and poor tire wear

Ride Heights

Ride height is a critical area when setting up your chassis. Too low a ride height could cause the car to bottom out. This will not only upset the chassis on the track, it can cause damage by creating a hole in the tubing. Just remember, what you change on one end of the car will affect the other end.

In the picture below, this racer marks a measuring tape for quick reference. This is a good idea for fast paced race days.

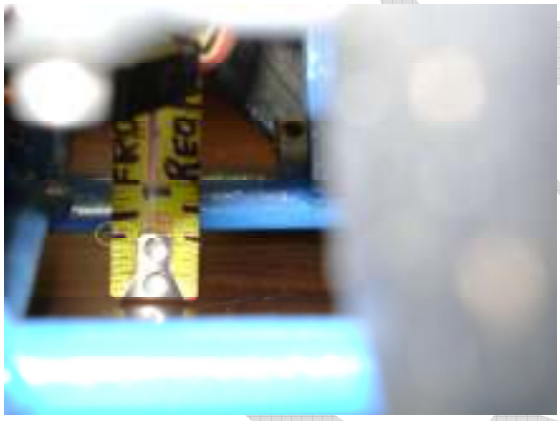

Suggested starting ride heights; Front - 9/16” to 5/8’ Rear – 5/8” to 3/4"

A higher REAR ride height, will create more drag on the straight-aways, but will help the rear stick in the corners.

The higher the R/F ride height the tighter the car will be. Tightness means the front-end will plow or push in the turns.

A higher L/F will tighten the chassis. A higher R/R will tighten the chassis also.

A higher L/R will loosen the chassis. In other words, the rear of the car wants to sweep out or come around in a spin.

Tire Temps

The tires we use today are far more advanced than those the pioneers of quarter scale used back in the day. BRP is the primary tire supplier in Quarter Scale today. WCM Corp has a tire brand also.

Tire management is the key to longevity. With proper chassis settings & the correct compound for the track, our tires will last an entire season in most cases... even longer in some too.

One way to measure tire wear and contact patch is with a temp-gun. These can be purchased from several suppliers and range in price from ten dollars to hundreds. No need to buy the high-end guns for use in our hobby. The basic gun will work just fine. It will give you a good indication of the chassis adjustment needed to get the tire wear even.

Also, a grease pencil or tire markers are two other options to measure tire wear. Make marking lines along and across the tire.

The areas of the tire you are looking to compare are the Inner, Middle & Outer Edges (IMO). This is the over all footprint of the tire. Now, time to run some laps...

By running 10 to 20 laps, then checking those lines or temps with a gun, you will be able to see your tire wear & how well your setup is working. One way to analyze your tire temperatures is to run 10- 20 laps on a base setup. It will take several 10-20 lap sessions to sort everything out that is going on with the tires. Note: Ever how many laps you choose to run when testing, use that same amount of laps throughout your test session. This will help insure consistent results. When analyzing tire temperatures it should be done in a specific order. This is the only way to insure you are addressing one area and not another problem in another area.

Points to remember...

A front-end with too much toe-out will show higher temperatures on both inside edges of the front tires.

A front-end with too much toe-in will show higher temperatures on both outside edges of the front tires.

Tires with too much negative camber will show a higher temperature at the Inside edges.

A tire with too much positive camber will show a higher temperature at the Outside edges.

The corner of the chassis with the highest average temperature is the one that is being most worked.

The corner of the chassis with the lowest average temperature is the one that is being least worked.

The hotter the tire the quicker it will wear.

Tire Test Session

- Run 10-20 laps, adjust front cambers accordingly. Run another 10-20 laps...
- Adjust toe if needed. Run 10-20 laps...
- Adjust setup based on RF & RR tire temp average. Run 10-20 more laps...
- Look for excessive wear and/or heat on any tire. Adjust on that corner of the chassis. Run 10-20 more laps...
- Repeat the process all over again until optimal temp and wear is achieved.

Springs

Quarter Scale cars have Coil Springs located at each corner on the chassis. The springs essentially hold the car up and also determine the amount of weight to be transferred across the chassis. Most QS springs slide over the shocks and are held in place by shock retainer nuts. Using the shocks, the springs and the retainer nuts, you will be able to adjust ride heights and corner cross weights. The springs are measured by the amount of pounds it takes to compress them 1 inch. Springs come in a variety of colors pertaining to their weight rating which is usually 8-35 lbs. A higher number means a stiffer spring.

In oval racing, the heaviest spring will be on the RF corner of the chassis with the lightest being on the LR corner. This is due to weight being transferred when the car enters the track corners. As the car enters the corner, more weight is transferred to the RF therefore requiring a heavier spring.

Springs will sag over time just as a mattress spring does. With the cost being at a minimum, many racers buy new spring sets at the beginning of the race season to reassure optimal performance.

Shocks

The primary function of the shock absorbers (or “dampers” as they are properly known), is to control or “dampen” the energy as it enters and exits the springs, which when compressed (“bump”) and then released (“rebound”) have a tendency to overshoot their original length as they release the energy imparted by the original compression.

Shocks do not control the amount of weight transfer in a corner but they will however control how quickly the weight is transferred. Therefore, the car’s behavior during moments of transition; such as initial braking, brake release, initial turn-in and application of throttle can be affected by a damper setting change.

A car with a broken or bent shock will almost handle so badly, the racer will not be able to stay competitive with the other cars on the track.

*Racer Tip**

Store Lexan bodies in an area that will allow them to stay at room temperature. Do not expose them to winter temps during off season. Lexan is affected by freezing temperatures just as many plastics are.

Quarter Scale Shock Rebuild

Shocks do not support the weight of the chassis. They dampen the travel of the chassis up and down by controlling compression and rebound. This helps keep the tires in contact with the track and stabilizes the suspension. A piston connected to a rod, works against shock oil in the shock body. As the suspension moves up and down, the oil is force through holes in the piston. This slows the suspension travel down. The amount of resistance will depend on the weight of the shock oil and the volume allowed to flow through the piston.

Rebuilding your shocks should be performed on a regular basis depending on your race schedule. Some will tell you to rebuild after every race but most do it far less. If you notice your shocks are leaking at the lower part of the shock body, it's a good indication that it's time to rebuild them.

The first step of rebuilding your shocks is to remove your shocks from your car. Next remove the spring retainer nut. Now slide the spring off the shock body. Next remove the studded rod-end (some have a shock cap) and dump out any oil that is in the shock body. Be sure not to lose any small pieces that may have come loose as they can often be reused if you remove the shock cap first.

The next task is to remove the e-clip(s). Use a small screwdriver, and place it in between the e-clip and the shock shaft. Then pry the e-clip off of the shaft. Next you need to remove the piston head. Alternatively you can remove the screw on rod end on the opposite side of the shock, and then push the shock up enough to remove the piston head. To unscrew the rod end you have to hold the shock shaft still, which usually involves pliers. **Careful:** This can scratch up the portion of the shock shaft that moves in and out of the shock. A scratched shock shaft will leak. You will need to use pliers when reassembling the shock shaft. I place a rag or fuel tubing in the pliers jaw when gripping the shaft. After removing the piston head, you can access the other e-clip. Next simply pull the shock rod out of the bottom of the shock cap. After the shock rod has been removed, you'll need to once again tap the shock upside down on the table and remove a small object similar to the piston head, but smaller. Then remove the o-rings and any spacers inside the lower part of the shock body.

Now that you've disassembled your shocks, you should clean the parts and inspect them for wear. You will need to have shock replacement parts on hand when you perform the rebuild. This includes the o-rings and other items you may need to replace as well, such as bent e-clips or the piston head. If your shocks are leaking inspect the o-rings for cuts or nicks. Even if you don't see any problems with the o-rings it is generally best to replace them as even small defects can cause a leak.

Another item that should be inspected is the shock rod itself. A bent or scratched shock rod can be the culprit for leaks, and should be replaced with a new one. If the rod end is bent, cracked or damaged you should replace it as well. You will want to also examine the rest of the shock as well. Any parts that are worn or cracked should be discarded. Take the time to clean all the parts of the shock before beginning the reassembly process. Pay close attention to the holes in the piston head. If the piston has holes designed into it, then check the holes for debris. The holes can sometimes get clogged up, and if that's the case, you should make sure the holes are clear.

To reassemble the shock first coat the lower o-rings and any spacer with shock oil, and then return them to their spot in the lower portion of the shock body. Next you'll want to slide the shock shaft into the shock cap. Before sliding the shock shaft in place, put a little shock oil on it as well to ensure that you don't damage the o-rings. Then gently slide the shock shaft up into the shock body. The picture below shows the proper order in which the components are reinstalled, which is the reverse of how we disassembled. If you find it necessary to use pliers to hold the shock rod still, either keep them on the rod threads, or use some fuel tubing over the ends of a pair of needle nose pliers.

After reassembly is complete, it is time to fill and bleed the shock. You will fill the shock body up with the shock oil of your choice. Fill the body up to about 1/16 inch of the top. Then slowly move the shock rod up and down. Continue doing this until you don't see any more air bubbles in the shock fluid. Finally screw the shock cap back into place.

A nice little tool to have for shock bleeding is a tiny funnel such as the one picture below. These can be picked up at beauty supply shops or plastic supply companies.

Building shocks is no different than setting up a chassis or driving the car. The more you practice, the better you will become.

Shock Oils:

I prefer Associated Shock Oils over any on the market but this is my own preference. Depending on track conditions and seasonal temperatures, you may never change from one weight of oil to another. I have stuck with the same weight oils per shock position for several years. Shock oils come in many weight variances. Typically quarter scales shocks will use oil weight ranges from 10 to 80. Once again, this will be personal preference. There will be basic setups added on the article page that can help you choose the right oil for your car.

Using Setup Plates

Setup plates are a great tool to use on the shop work bench or at the track.

The plates can be purchased through 1/4 scale Mfgs. Pro1 offers a nice set. You can also make your own out of several materials such as aluminum, lexan, masonite or metal. The round plates pictured on the right are Pro1 plates and are very high quality. The square is home made of steel. Racer preference will usually dictate the style & material used. I use both but prefer the square over the round just because I don't have to chase the chassis rolling on the bench.

Mounting the plates can be accomplished with a cordless driver or just a standard nut-driver. If you have studs on your hubs it makes this a lot easier but standard wheel screws work just as well. Two on each hub placed diagonally will be sufficient. Caution: if using a drill the plate can spin in you hand & get away from you! Once you have the plates mounted snuggly, set the chassis on a level table or bench. Using square plates you will need to align the rear hubs so that the plates are flat. If not, you will have the result of the picture to the right with one plate not setting flat.

Now you are ready to do the measuring of front/rear toe, wheel camber and wheel alignment with the chassis. These measurements put to the proper adjustments will help a chassis work to the best of it's ability. Take notes along the way. Your notes will become a base setup to refer back to as you progress in racing.

Measuring from the bottom frame rail to a straight edge you can set rear & front-end toe, track width and front to rear alignments. When using a straight edge remember to place it as close to the center of the plate as possible so that camber will not affect true toe alignment. See our other *On the Bench articles* that cover camber & toe adjustments.

Making your own Setup Plates

Safety First! Always wear ***safety glasses*** when ever cutting, grinding or sanding any material. Use other safety gear such as gloves when ever appropriate.

The material you choose for the plates will dictate the time it takes to make them. If using lexan, plexiglass, Masonite or 1/4 plywood you can cut these with a table saw, jig saw or a knife in your own work area. If you prefer aluminum or metal, it's best to let professional shop cut them with a plasma cutter or a sheer press.

The plates should be approximately 6 inches square or 5 - 7/8 inches round . Once you have the plates you will need to find the center then mark it with a center punch tool. The hole in the center should be 7/8" inch in diameter to allow for clearance of the hub bearing carrier. Once you have the center hole in place, it is best to use a hub as a template to layout the bolt holes. But...the bolt holes should be on a 13/16" circular patter from the center. Now that you have the holes in place, fit the plate onto a hub to see how well it works. Three more just like this one & you'll have a full set!

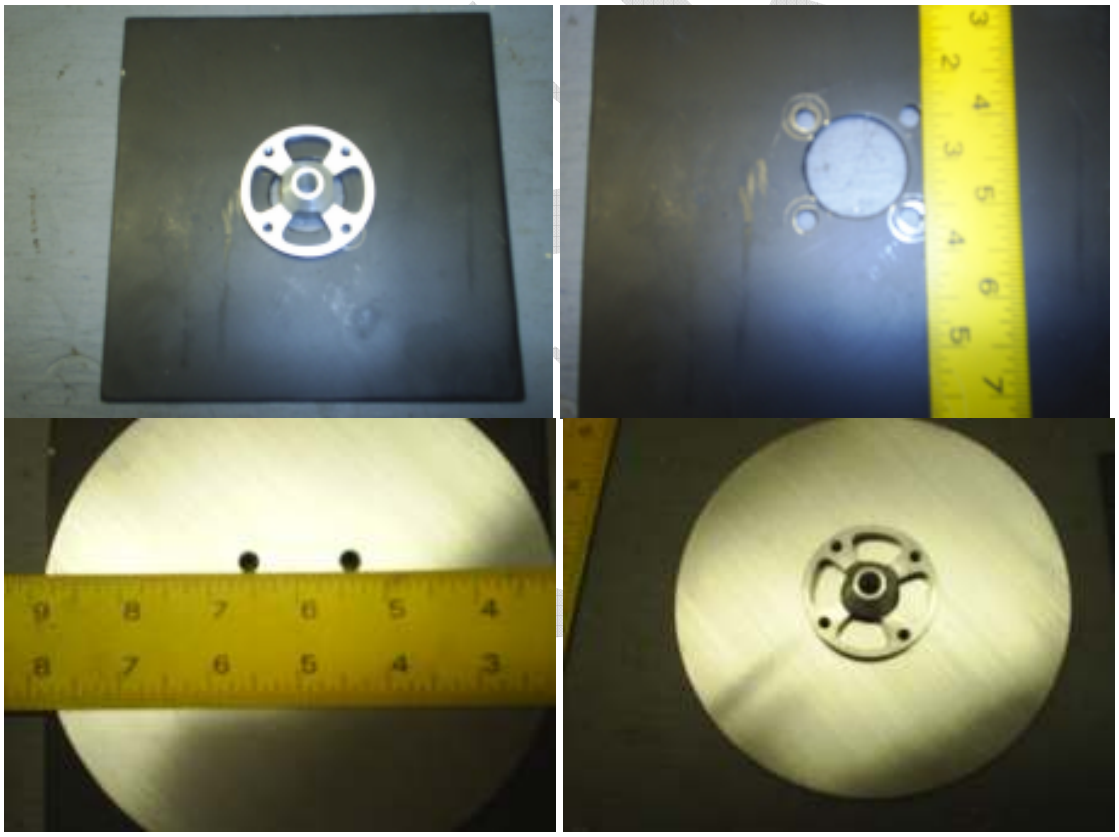

Pre-Race

Face it, IF you are not looking for potential problems then you will not find them; they will find you! A Pre-Race checklist will help eliminate any mechanical problems that can take you out of a race.

During the race day, check under the body regular. Your car might be handling great on the track, but that's no excuse for overlooking those minor issues that can become bigger!

A bent heim (pictured) joint may not be felt right away while on the track, but it will eventually affect another component like tire wear.

In order to check the items listed below, a clean chassis is a must. Take the time to properly clean the chassis and all moving parts before, during and after a race. Air compressors are one good tool to have at the track. If you do not have one, asked a fellow racer if you can borrow his. Don't forget to return the favor somehow in the future. Use the checklist below to help you start off to a good day of racing. Also, add anything you come across that is not on the list. You list can be used for post race inspection also.

Thanks to Allen Johnson Motor Sports for the list on the next page!

RACE CAR CHECKLIST

DATE:

	THE FRONT SUSPENSION
	Clean and check the steering rack for binding
	Clean and lube and inspect steering heims for binding
	Check servo savers, they should be firm not weak
	Check servos for proper adjustment and alignment (also check with radio)
	Check A arms for binding
	Check A arm lock collars
	Check spindles for binding
	Check spindle heims for binding and lubricate
	Clean and lube spindle bearings
	Check shocks for leaks and proper amount of oil
	Check ride height
	Make sure sway bar is neutral after all ride height adjustments are made
	THE REAR SUSPENSION
	Check all heims for binding clean and lube
	Check dog bone for binding and proper adjustment
	Clean excess rubber off gears and belt
	Check shock for leaks and proper amount of oil
	Check trailing arm bearings for excessive end play
	Check wheel hubs for signs of slippage
	Check rear toe adjustment
	Check front trailing arm heims for binding
	THE ENGINE COMPARTMENT
	Check engine bolts for tightness
	Check carburetor bolts
	Check carburetor gaskets and restrictor plate for cracks
	Check throttle and brake linkages for proper adjustments (also check with radio)
	Check fuel lines and fittings for leaks, cuts, kinks, excess ware
	Check ele. wiring for kinks, cuts, tie straps too tight, excessive rubbing, no wire should be tightly wrapped or strapped this will damage the wire.
	Make sure ele connections are of good quality, clean and not oxidized
	Check batteries for leakage and proper charge
	Inspect and clean the spark plug
	Clean the air filter
	GENERAL
	Check tire caps for loose edges and excessive ware.
	Keep your chassis and body clean, in good repair and properly mounted. A body loosely mounted or mounted too high will **adversely affect handling.**

Trouble Shooting the Setup

#1. WILL NOT TRACK STRAIGHT

(a) Check the toe on the front end or rear of the car.

(b) Something could be binding, not letting the steering return to center.

Examples:

1. Helm end binding up
2. Steering rack binding
3. Servos in a bind
4. Worn out servo savers

If car goes about half way down straight of way and the car starts turning left - check RR band. Could be coming loose or host tire could be separating.

#2. HOOKS OFF CORNER

Check for the following:

1. Steering could be binding. (Heim or rack)
2. RF host tire is too soft.
3. RF compound is too soft.
4. RF tire has too much camber.
5. RF spring is too weak.
6. RR spring is too stiff
7. RR band is coming loose.
8. RR compound could be too hard.
9. RR tire does not have enough camber.

#3. THE CAR'S LEFT FRONT TIRE PICKS UP

Check for the following:

1. RF tire compound is too soft.
2. RF or LR spring is too stiff
3. RR spring is too weak.
4. RF or RR tire has too much camber.

#4. PUSHING = THE CAR WILL NOT TURN GOOD IN CORNERS

Possible adjustments:

1. RF spring needs less pressure
2. RF tire needs more camber
3. RR spring need to have more pressure or a stiffer spring
4. Rear tires need more stagger
5. RF compound needs to be softer
6. RR compound needs to be harder

#5. PUSH\ LOOSE CONDITIONS = WHEN THE CAR HAS A SLIGHT PUSH GOING IN THE CORNER AND A SLIGHT PUSH COMING OFF UNDER ACCELERATION THEN BREAKS LOOSE.
NOTE NEED TO MAKE CAR TURN MORE IN CENTER OF CORNER
REFER TO SECTIONS: #4) PUSHING #8) STAGGER #9) TIRE TIP

#6. LOOSE = WHEN YOU CANNOT KEEP BACK END OF CAR FROM PASSING THE FRONT END

Possible adjustments:

1. RE tire needs less camber
2. RR tire needs more camber
3. RR spring is too stiff
4. RR shock's ride height needs to be raised 1/8"
5. RR compound needs to be softer
6. RF compound needs to be suffer
7. RF compound needs to be harder

NOTE CHECK AND MAKE SURE RR OR LR IS NOT COMING LOOSE

#7. TIRES - ALL HOST MUST BE GLUED TO WHEELS. NO LOOSE EDGES ON BANDS.
NOTE NOTHING WORKS IF THIS IS NOT DONE!
PREFERED COMPOUNDS:

1. RF- extra firm host - compound 530 split
2. L~ - soft host - compound 310
3. LR - soft host - compound 310
4. RR - medium, firm host - compound 320, 400, 410 or 420

#8. STAGGER = DIFFERENCE IN CIRCUMFERENCE OF LR TIRE (SMALLER) VERSES RR TIRE (BIGGER). THE MORE STAGGER, THE MORE THE CAR WILL TURN IN THE CENTER OF CORNER. THE CARE WILL BE LOOSER GOING IN AND COMING OFF THE CORNERS.

#9. TIRE TIPS

(a) If you start off with a car turning or it has a slight push, and after 50 laps or so it starts getting loose - it's probably 1 or 2 things.

1. RF compound is getting hot and sticky. It's biting more which upsets the chassis
2. RR compound is getting too hot and giving up. If RR tire grains, you will be riding on the grain, making the car unstable.

To adjust one or the other, you need to change the compound on tires.

#10. FINE TUNE ADJUSTMENTS

Basically, you want to have even wear across the tire. If the RR wears a little on the inside, that's OK. If RF wears a little to the inside or the outside, it's OK.

TO FINE TUNE A CAR:

1. RR Lower Track Bar needs to be lengthened or shortened.
   LENGTHENING WILL TIGHTEN THE CAR UP
   SHORTENING WILL MAKE THE CAR LOOSE
2. RF Upper Heim End needs to be lengthened or shortened
   LENGTHENING WILL MAKE THE CAR P USH
   Shortening WILL MAKE THE CAR TURN MORE

3. RR or LF Shock's Ride Height needs to be moved up or lowered
MO VING SHOCK'S RIDE HEIGHT UPWARD ON RR OR LF WILL TIGHTEN THE CAR UP COMING OFF THE CORNERS.

LOWERING SHOCK'S RIDE HEIGHT WILL MAKE THE CAR LOOSER IN AND OFF THE CORNER.

CHASSIS SET-UP & TROUBLE SHOOTING

CAMBER = AMOUNT OF TILT IN TIRES

The top of all four tires should be to the left of the car. On a flat surface half of the tire should touch the surface, as a starting point.

TOE IN I TOE OUT = DISTANCE BETWEEN FRONT AND BACK OF FRONT TIRES AND REAR TIRES

The front of the front tire should be wider that the rear of front tires by 1/16" toe-in per side. Check this with a long straight edge against the side of the rear tire pointing straight forward.

RIDE HEIGHT = THE HEIGHT THAT YOU SET THE SUSPENSION GEOMETRY

FRONT END - With suspension suspended, adjust the shock height to where the lower control arms are parallel with the bottom of the frame.

NOTE: CHECK SWAY BAR, MAKING SURE IT IS NEUTRAL. (NO PRESSURE ON REAR ADJUSTING LINKS)

REAR RIDE HEIGHT - Collapse chassis in rear to ground Adjust shock height to where the shock lacks 1/16" to 1/8" of bottoming out.

SPRING TENSION - AMOUNT OF PRESSURE ON SPRING

LF -20 to 25 lbs. spring with collar sitting on spring top, collapse 1/4" to 3/8"
RF - 12 to 16 lbs. spring, collapse 3/8" to 1/2"
LR - 7 to 8 lbs. spring, collapse 1/2" to 5/8"
RR -22 to 29 lbs. spring, collapse 0 to 1/8"

Racer Tip

When storing tires for winter months, clean them with water, allow to thoroughly dry and then place them in a Ziploc bags. Place the bag in an area at room temperature.

The Tool Box

These are tools suggested by racers to have in the shop & at the track. Some of these tools the average racer can get by without but others are a must for the Quarter Scale Racer.

1	TEMP-GUN	HARBORFREIGHT TOOLS
2	CORDLESS DRILL & HEX DRIVERS	HARBORFREIGHT TOOLS
3	SILVER SHARPIE MARKER (TO MARK WHEEL SIZE)	WALMART/OFFICE SUPPLY
4	1/4" SOCKET EXTENSION (3")	HARBORFREIGHT TOOLS
5	CART OR HAND TRUCK TO HAUL CAR	HARBORFREIGHT TOOLS
6	RPM MONSTER CAMBER GAUGE	towerhobbies.com
7	HEX WRENCHES	AUTO PARTS STORE
8	1/4" WIDE TAPE MEASURE FOR TIRE DIAMETER	HARBORFREIGHT TOOLS
9	TAP & DIE SET (TO CHASE AND TRUE THREADS)	HARBORFREIGHT TOOLS
10	GOOD SOLDER IRON	HARBORFREIGHT TOOLS
11	LIGHT WEIGHT AIR COMPRESSOR	HARBORFREIGHT TOOLS
12	TIRE DUROMETER (GOOD TOOL BUT NOT A MUST)	GO-KART SUPPLY SHOP
13	SANDING BLOCK (TO REMOVE TIRE GRAINING)	CUT WOOD TO FIT SAND BELT
14	TIRE PAINT STICK TO MARK TIRE TEMPS	AUTO PARTS STORE
15	MANUALS (RADIO, ENGINE, CHASSIS, SETUP SHEET)	DOWNLOADS COMING
16	DUCT TAPE	HARDWARE STORE
17	GOAT/LAMP NIPPLES (FEED BOTTLE) FOR DOG BONE	FEED & GRAIN STORE
18	ZIP TIES (ASSORTED SIZES)	AUTO PARTS STORE
19	SHOO GOO	WALMART

Engine

Without a proper operating engine and carburetor combination, you will never be competitive in racing. There's nothing like a new engine or a fresh rebuild to start the season off. It is hard to go wrong with a new engine but many racers choose to rebuild their own. If any racer attempts a rebuild of their own, always seek out assistance and technical advice before doing so. If is fair to say you will get mixed results from racers on building techniques.

Note: Engines used in QSAC competition must remain stock & all parts must be OEM when replaced. Check the latest QSAC rules for engine specifications. QSR will never endorse any engine modifications unless otherwise approved by QSAC.

Five popular spark plug patterns for two-stroke engines

Heavy Carbon
This plug has heavy carbon build up. This engine had a blown crank seal on the tranny side of the crank. Tranny oil entered the crankcase and was burned in the combustion chamber. Engines like this will billow thick blue smoke out the exhaust pipe.

Heavy Carbon

Wet Fouled
This plug is wet fouled. The spark plug's heat range is either too cold or the carb jetting is too rich.

Wet Fouled

Sand Glazed
This plug has a shiny appearance. The engine had a problem with air filter sealing. Sand entered through the filter and into the engine. The high combustion temperatures caused the sand to melt and form glass around the spark plug.

Sand Glazed

Melted Aluminum
This plug has tiny globs of aluminum packed around the insulator. The engine suffered a meltdown from ignition timing that was advanced too much. The heat could not transfer from the spark plug fast enough and the center of the piston melted causing the molten aluminum to collect on the plug.

Melted Aluminum

Perfect Color
This is a perfect plug. The color is mocha brown so the carb jetting is optimum. The first three threads are black signifying the plug's heat range is matched to the application. There are relatively low deposits considering that this engine was run on regular pump petrol.

Perfect Color

Radio Setup - A word of advice from Scott Harper

Set your endpoints so that you get max throw left and right without locking up the wheel. Then set both sides with whatever the lowest side is. Example if the left locks up at 75% and the right at 80%, then set the right to 75% EPA, that way both directions will be linear in steering. Also this will allow the "Uh-Oh" switch to allow max turn without binding. Set this with the chassis at ride height.

Now set the "dual rate" to allow for enough steering to get around the track. Do not get caught up into what dual rate someone else is running. It is all relative. Just because I am running at 55% and Joe is running at 25% does not really mean anything until you take into account length of steering rods, position and size of servo savers end point adjustments and mounting position on steering blocks. So in short, run the percentage you need, keep that in mind so you know if you change it you can go back to it. It will also help you determine if you have picked up a push.

Another thing about dual rate, there is such a thing as too much of a good thing. If you car is pushing and a few clicks does not get you the result, say up to 10% increase, then there are other things to work on. What can and will happen is you put so much steering input into the car that is just pushes the front tires along the track without steering the car. This is a different push than not enough steering or not enough grip on the front. It is like on a Big Wheel, if you turned the front 90° to the rear tires it will just scrub with out turning.

DO NOT turn down the "speed" of the steering servo, set them at 100% for throw and return. IMO, it is a common misconception that this will allow the car to be easier to drive, but what happens is that you have to turn sooner to get the wheels to be turned when they need to be. Learn to control the "speed" of you turn with the wheel of the radio, it really will not take that long and in the long run be a better way to go.

Exponential, I don't like that either, although some do. I want the wheels and throttle doing what I tell them to do, how much I tell them and when I tell them. This is a personal preference thing. To me the exponential and servo speed settings make the car and response feel lazy and give a false feeling as to what the car is really doing.

Maybe more than you really wanted to know, hope it helps.

Written by Scott Harper

Bearings

Maintenance Instructions

1. Keep your bearings dirt-free, moisture free, and lubricated. Water will rust your bearings and dirt will destroy the smoothness of the super finish on your bearing races, increasing friction.
2. Clean your bearings when they become dirty or noisy with the most environmentally friendly cleaner you can find that is suitable for dissolving oil, grease, and removing dirt from the steel, plastic and rubber surfaces. We have tried many cleaners and solvents and many of them can be used safely. Citrus based cleaners can work, but they tend to leave behind a slight residue. Solvents are dangerous to use, but often provide a superior solution to cleaning very dirty bearings. If you use a water based cleaner like a citrus cleaner or a detergent, be sure to dry your bearings immediately and then re-coat them with lubricant to prevent rust. Some solvents/commercial products that we have used are: pure, or almost pure, isopropyl alcohol (The kind normally found in markets is only 10% pure and does not cut grease well.); Gumout® carburetor cleaner (found in auto parts stores); acetone (found in hardware stores). If you can't find any of these solvents like acetone or pure alcohol, you can use paint thinner or lacquer thinner, but these cleaners are oil based and may leave an oily residue on the inner surfaces of your bearings.
3. If you use a solvent cleaner, please wear appropriate rubber gloves and work in a safe well ventilated area. When you are finished, please remember to dispose of your solvent in a safe, ecologically sound manner.
4. Do not add oil to dirty bearings. It will not clean the bearing, but merely flush the existing dirt further into the bearing. It may seem like they roll faster initially, but in reality you are only spreading the dirt around, and it will still be there to ruin the high precision rolling surfaces of your bearings. Clean your bearings before re-lubricating them.

Setup Sheet — Quarter Scale Racer

Download: quarterscaleracer.com		Date:	
Track:		Chassis:	
Weather/Temp:		Class:	

Left	Front-End	Right
	Tire / Size	
	Camber / Gain	
	Caster	
	Spring	
	Ride Height	
	Toe In/Out	
	Shock Oil	
	Shock Preload	

Left	Rear-End	Right
	Tire / Size	
	Camber / Gain	
	Caster	
	Spring	
	Ride Height	
	Toe In/Out	
	Shock Oil	
	Shock Preload	

Left	Tire Temps	Right
LF: / /		RF: / /
LR: / /		RR: / /

Sway Bar

Track Bar	
o	o
o	o
o	o
o	o
o	o
o	o
o	o
o	o

Trailing Arm	
Left:	Top / Mid / Bot
Right:	Top / Mid / Bot

Fuel / Mix
Oil:
Octane:
Mix:

Tight	Loose
More RF Camber	Less RF Camber
More Caster	More RR Camber
More Rear Stagger	Less Rear Stagger
Less Cross Weight	Stiffen RF Shock
Soften Front	Soften RR Shock
Stiffen RR Shock	Less LR Camber
More LR Camber	Raise LR Ride Ht.
Raise RR Ride Ht.	

Engine / Gearing
Spark Plug:
Carb Jet:
Pinion Gear:
Spur Gear:
Gear Ratio:
RPM:
Eng. Temp:

Tech Talk - Electronics

Electronics, they are what makes the car work. Without a good electronics setup in your race car it is going to make for a very long, bad day.

Remember a few things when setting up the electronics in your race car. First keep it simple, keep it clean and finally use good high quality parts. Do you really want to trust a race car that you have invested time and money in to a $1 switch or a bargain connector? Do not let a saving couple of dollars take that car you have worked hard on and slam it into the wall and destroy it.

While we are on the subject of switches, stay away from the cheap, open slide type switches. With all the fuel, oil, dirt and rubber that these cars kick up you need to use a high quality sealed switch. When mounting your switch, mount it in a manner that the most impacts will not turn the switch off. If you are mounting it so the action is left and right in the car, mount it so that you move the switch to the right to turn it on. If you are mounting it so the action is front to rear, mount it so you move the switch forward to turn it on. This is not always necessary, but an ounce of prevention is worth a pound of cure or in our case thirty pounds.

Since we are talking connections, look at your servo connections. The simpler you make this, the better this will be. Have as few connections as possible. Keep this in mind, for every extension or plug; you add to two more connections and two more things that can go wrong. I have seen some good intentions with very clever boxes and I have seen those boxes cause some very bad problems. What happens is all those connections start working loose from the vibration and will cause intermittent problems for you. What I suggest is to use one "Y" cable for the steering servos and plug that "Y" cable into the receiver. Also, mount the receiver in a position close enough that the throttle servo will not need an extension cable. Another good thing to do is to use small cable ties on the "Y" cable where the servos plug into it. This will prevent them from working loose.

Pick up some wire loom at your local auto parts store. This stuff is great for making a neat installation. Not only has that but the loom added another layer of protection for your servo wires.

Now take a look at the life blood of your electronics system. The battery. Is the shrink wrap coming off of it? Is there corrosion on the cells? Are the wires frayed? Is that connector loose fitting or hard to line up when plugging it up? If you answered "yes" to any of these questions, you are racing on borrowed time. It is only a matter of time before one or all of these things cause your car to do something you are not telling it to do. Use only silicone coated/high strand count wire to make the connections to the battery pack; I would suggest a minimum of 14ga. Inspect that connector. I have seen many a car loose control due to loosing a bond in the battery connection. Some racers have even gone to the lengths of hard wiring in the battery pack and only having a connector for charging. That has its advantages and disadvantages. On the up side, there

is no connection to break down. On the down side and this is especially true if you are running the new LiFe or LiPo batteries, if you are not going to run your car for a while, you MUST be sure to keep the pack charged. If you do not and you leave it connected, the possibility exists that you will ruin a LiPo battery, and it can happen with the LiFe batteries as well. It can happen with the NiMh or NiCd batteries but they are easier to charge if they do loose all of their charge. Stay away from the cheap Molex or Tamiya connectors. The Deans plugs work well and hold up to some abuse but I have seen these go bad as well. NEVER and I mean NEVER pull the connectors apart by the wires. Always grab the connector halves and pull it apart or push it together. Should you grab your Deans plus and feel any heat, that connection is breaking down and it needs to be replaced as soon as possible. Also if you have to wiggle it to make the connection, DO NOT run the car. Swap out that connector. Remember to keep that receiver pack charged. Now that most of you are running NiMh or the new LiPo/LiFe packs, these do not build a memory like the old NiMh cells, so it fine to top them off throughout the day. I recommend you charge the night before going racing, leaving it unplugged from the car once it is fully charged and then depending on how much practicing you do before the qualifiers. Always charge your receiver pack before the main. This is another instance to be better safe than sorry.

The receiver pack in my car is a 3300maH NiMh pack and I will usually charge is at 2 amps. There is no need or advantage to pumping more current into the pack, we are not looking for the performance that the electric crowd does, so the lower charge rates are perfectly acceptable for our needs.

When charging the LiPo/LiFe packs it is EXTREMELY IMPORTANT to use the correct charger and charge rate. If you use a charger not designed for these cells you are asking for disaster. These cells charge in a completely different manner and will explode, swell or catch on fire if charged incorrectly. A charge rate of 1C is the recommended charge rate foe the LiFe/LiPo cells. This means that if you have a pack that is rated at 3300Mah than the maximum charge rate is 3.3 amps. If you are not going to be using your car for an extended period, you will need to put a storage charge into your pack. This is usually 40%; this will keep the cell from over-discharging and becoming unusable. NiMh batteries will self-discharge at a rate of approximately 1-2% every 24 hours, therefore it is very important to keep these cells charged properly and pay attention to how much goes into them.

By paying attention to how much it takes to top off your pack you can keep an eye on the health of your pack. If suddenly it is taking more and more to recharge your pack after the same amount of racing. That gives you an indication of something going wrong. You are running more, there is a bind on the mechanical side or you pack is starting to break down.

On to the brains of the operation, the receiver, It is very important to pick a mounting location that will allow the antenna to get a clear signal, be far away enough from the engine so as not to pick up interference. Pay attention to where you mount the receiver in a box, should you choose to use one, also when routing the antenna wire, do

not allow it to cross over itself. If the antenna wire does cross over itself, that is cutting down on the effective range of the antenna. Mount the receiver inside the box so the antenna gets out of the box with the least amount of antenna wire inside the box as possible. Be sure to mount the receiver securely so it does not take an undue amount of shock and get damaged. Remember to always run a resistor type spark plug. This cuts down on interference from the ignition system from the engine.

There is debate on whether or not a voltage regulator is necessary, personally I run one. I run the Futaba FASST system and with the voltage regulator in place so that I am sure that the FASST receiver does not get more than 6 volts. There are some Spektrum receivers that are capable of taking more than 6 volts, so read your instructions that come with your receiver to be sure what you have. Remember this, if you are running any pack that is over 8 volts, such as a 3cell LiPo/LiFe pack you MUST run a voltage regulator. Putting that kind of voltage into your receiver is going to damage it.

I talked with Sonny Brown who is the Surface Team Manager for Spektrum. I asked him some things about the Spektrum systems. The information should prove useful for those of you running that type of system so here is that information. Below is the information Sonny shared.

T.D.S. Will the Spektrum system accept more than a 6volt input and do you need a regulator?

S.B. All Spektrum Receiver will accept up to 9.6v of input. This allows racers to choose from standard 5-6cell NiMh packs or 2S Lipo batteries if they have compatible servos. Personally I use a 2S Lipo Receiver pack and our new SPMSS6100 High Voltage, High Torque servos. I'm really happy with the performance and when compared to other HV offerings they are very affordable.

T.D.S. Is there a recommended receiver for Quarter Scale?

S.B. All Spektrum surface receivers may be used for Quarter Scale racing. For maximum performance I would recommend the use of the SPMSR3100 or SPMSR3520 (micro) DSM2 receivers. DSM2 is an updated version of our DSM technology and allows for a faster and more precise feel on-track.

T.D.S. Is the Spektrum module for the Futaba 3pk discontinued?

S.B. As of right now the 3PK system has not been discontinued. However, we our currently out of stock.

T.D.S. What are the most common problems you see when it comes to the receivers?

S.B. The most common issues that I see are improper receiver instillation. When using a Spektrum receiver it is important that the antenna is fully extended and the

tip is at the highest point. The reason for this is that 2.4 antennas are still a tuned length and when they are folded over, coiled tightly, or packed inside of a receiver box you can loose range or reception. It's perfectly fine for the antenna to be under the body. One other tip is to not mount the receiver directly to the metal chassis or have the antenna touching a metal bar. This can also cause some interference issues. A radio box with the antenna coming out the top and isolated a few inches away from the chassis is best.

Thanks Sonny for the information!

Something that can cause problems for your car that is not electrical, but it is directly tied to the electrical system. Linkages, both the throttle and steering linkages must be free through their entire range of movement. If they are not, you can burn up a servo or even break the gears inside the servos. Check your throttle cable and brake linkage to be sure these do not bind and cause the servos to work harder that they have to. Be sure to set your endpoints (EPA) on your radio so that the servos do not over travel. If they do, this will cause undue stress on the gears and can also cause the control board inside the servo to burn up by having too much of a strain on it by attempting to push through a mechanical limitation.

Just remember the shortest wires possible, the fewest connections, good connectors and switches and free linkages. Doing these things should help you have a worry and trouble free day with your race car, at least as far as the electronics side of it is concerned.

It is really not as complicated as all of this seems to make it. In using these tips in your racecar I hope that it makes your racing easier and lets you concentrate on the other aspects of racing like smiling for your picture in Victory Lane.

Article by: Scott Harper

WYK series

WALBRO

TRIMMER AND
BLOWER MODEL
CARBURETOR
SERVICE MANUAL

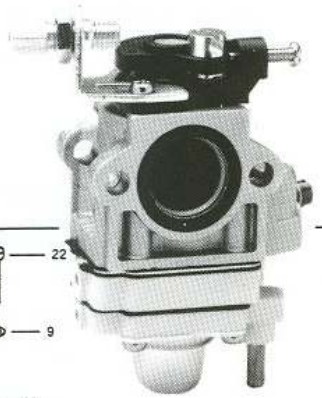

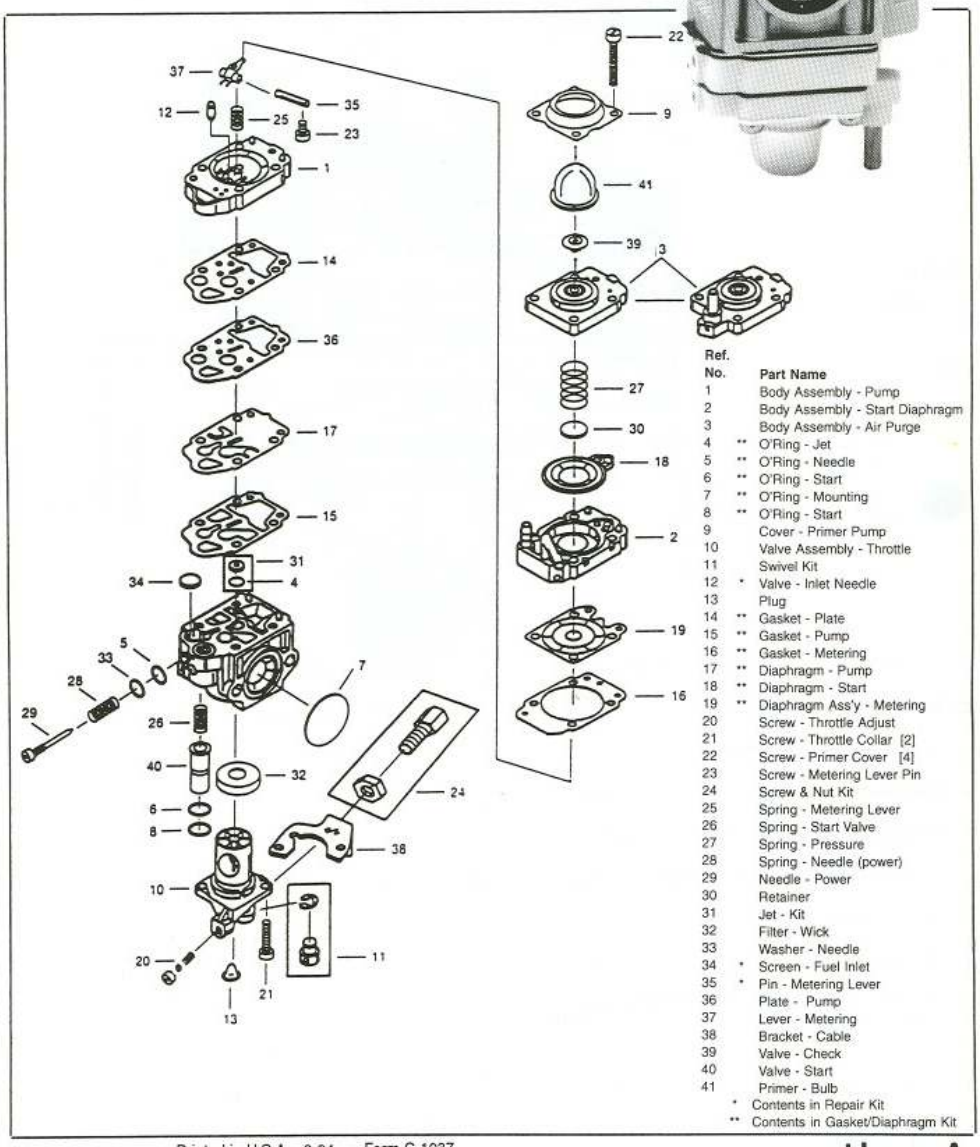

Ref. No.		Part Name
1		Body Assembly - Pump
2		Body Assembly - Start Diaphragm
3		Body Assembly - Air Purge
4	**	O'Ring - Jet
5	**	O'Ring - Needle
6	**	O'Ring - Start
7	**	O'Ring - Mounting
8	**	O'Ring - Start
9		Cover - Primer Pump
10		Valve Assembly - Throttle
11		Swivel Kit
12	*	Valve - Inlet Needle
13		Plug
14	**	Gasket - Plate
15	**	Gasket - Pump
16	**	Gasket - Metering
17	**	Diaphragm - Pump
18	**	Diaphragm - Start
19	**	Diaphragm Ass'y - Metering
20		Screw - Throttle Adjust
21		Screw - Throttle Collar [2]
22		Screw - Primer Cover [4]
23		Screw - Metering Lever Pin
24		Screw & Nut Kit
25		Spring - Metering Lever
26		Spring - Start Valve
27		Spring - Pressure
28		Spring - Needle (power)
29		Needle - Power
30		Retainer
31		Jet - Kit
32		Filter - Wick
33		Washer - Needle
34	*	Screen - Fuel Inlet
35	*	Pin - Metering Lever
36		Plate - Pump
37		Lever - Metering
38		Bracket - Cable
39		Valve - Check
40		Valve - Start
41		Primer - Bulb

* Contents in Repair Kit
** Contents in Gasket/Diaphragm Kit

Printed in U.S.A. - 8-94 Form C-1037

section A

WALBRO WYK CARBURETOR

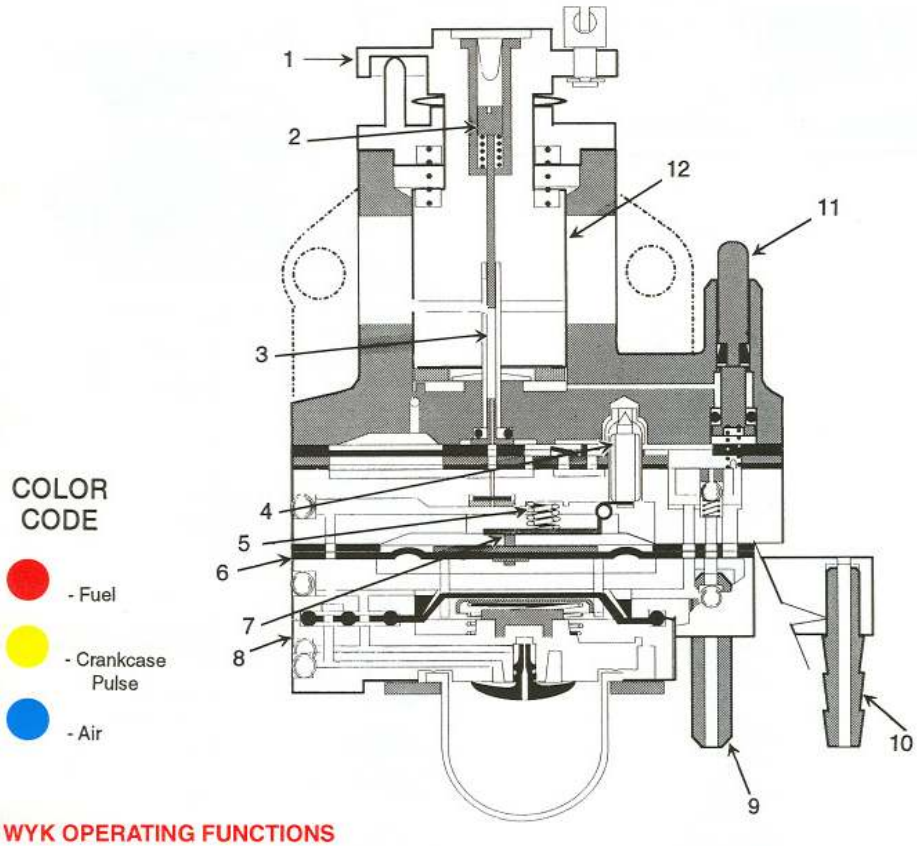

COLOR CODE

- Fuel
- Crankcase Pulse
- Air

WYK OPERATING FUNCTIONS

1. Throttle Lever Ass'y: Controls throttle barrel operation from idle to wide open throttle position.
2. Inner Idle Needle: Controls fuel delivery at idle, part-throttle and wide open throttle positions.
3. Nozzle: Delivers fuel from metering system to engine at idle, part-throttle and wide open throttle.
4. Inlet Needle: Regulates amount of fuel delivered to metering chamber.
5. Metering Lever Spring: Transmits force to metering lever.
6. Metering Diaph. Ass'y: Low pressure in crankcase allows diaph. to activate metering lever.
7. Metering Lever: Lifts inlet needle off seat.
8. Air Purge Ass'y: Purges air from carburetor and replaces with fuel for starting.
9. Overflow tube: Discharges fuel from purge area to tank.
10. Fuel Inlet Fitting: Fuel enters here from fuel tank.
11. Prime button: Delivers fuel to nozzle at start position.
12. Throttle Barrel: Regulates amount of air allowed to mix with fuel at idle, part-throttle and wide open throttle positions.

Page 2

WYK AT START POSITION (PURGE & PRIME)

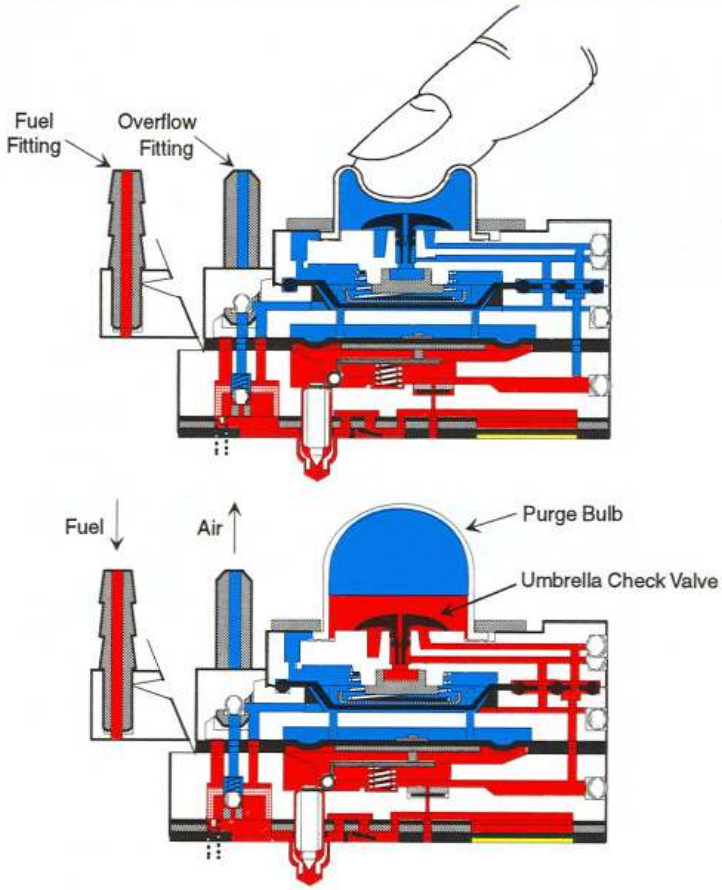

WYK AT START POSITION (PURGE)

By depressing the purge bulb, air is forced through the umbrella styled check valve. This air passes through the pump body and out the overflow tube.

When the bulb is released, the umbrella check valve is drawn closed. An orifice bypassing the check valve allows fuel to be drawn up from the fuel tank, through the carburetor fuel pump, metering chamber and into the primer bulb. Once the primer bulb is at least 1/4 filled with fuel, the engine is ready for the starter button to be depressed for 3 seconds and the engine started.

STARTER BUTTON (PRIME)

Some WYK carburetors are equipped with a starter button. This button when depressed for 3-4 seconds forces fuel from the fuel pump of the carburetor into the nozzle for easier starting.

WYK STARTING PROCEDURE

Depress purge bulb 4-5 times until fuel drains out of overflow tube.

Depress starter button for 3-4 seconds to allow fuel to flow into nozzle.

Hold throttle open part-throttle or wide open and pull starter rope until engine starts.

WYK AT IDLE POSITION

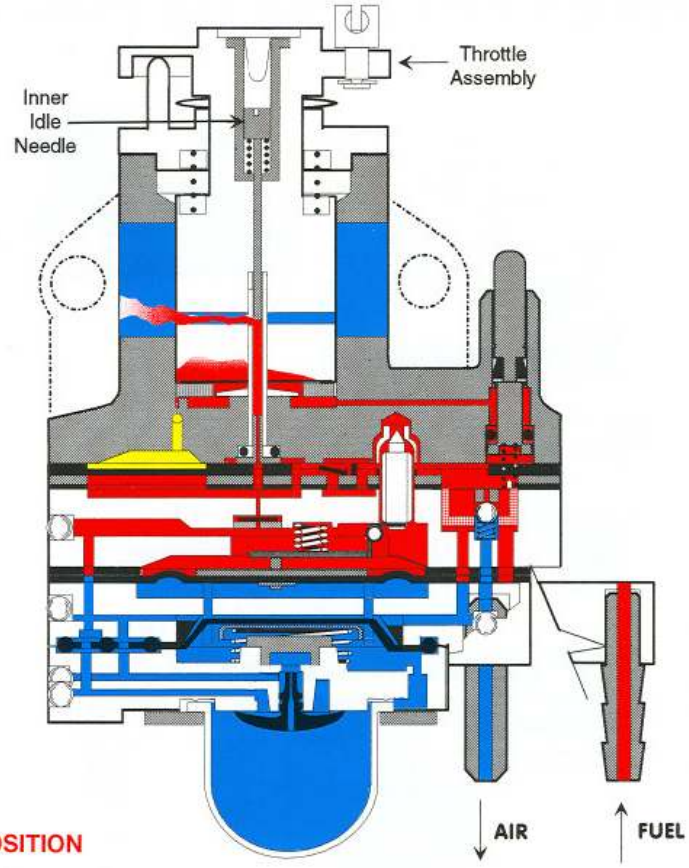

WYK AT IDLE POSITION

The barrel styled WYK carburetor adjustment at the idle position is similar to all Walbro barrel carburetors. A boss on the throttle bracket allows the throttle lever to create a ramp effect going from idle to wide open throttle. Idle adjustment is done with the inner idle needle located below the plastic plug. Note that when all idle adjustments are complete the plastic plug must be reinstalled.

WYK IDLE ADJUSTMENT PROCEDURE

1. Remove the plastic plug located directly above the inner idle needle.
2. Using a 2.5mm wide flathead screwdriver, turn out the inner idle needle until threads disengage.
3. Turn inner idle needle clockwise 10-12 turns in very slowly. The idle RPM will increase (lean) until the peak lean idle RPM is obtained. Once this is obtained, turn inner idle needle counterclockwise (rich) until optimum idle is obtained. Please note that carburetors and engine applications will vary therefore the needle settings may vary also.
4. Adjust the idle speed screw to the correct idle RPM.
5. Check idle, progression and wide open throttle.

NOTE: Some WYK carburetors are manufactured with a high speed needle. See instructions.

WYK AT THE WIDE OPEN THROTTLE POSITION

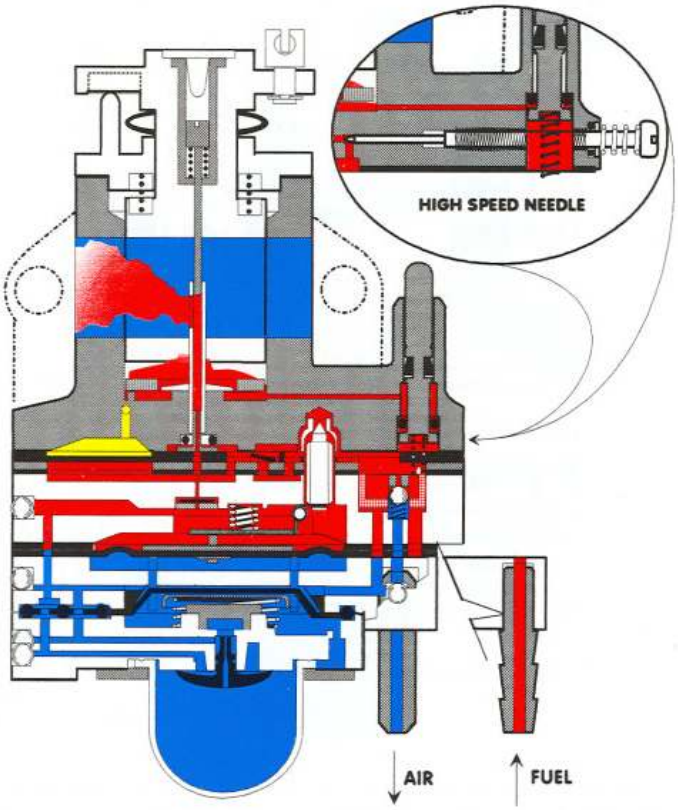

WYK AT WIDE OPEN THROTTLE POSITION

When the WYK carburetor is at the wide open throttle position, the throttle lever will be at the highest side of the ramp. This will allow the idle needle to be pulled away from the nozzle outlet and allow enough fuel to be fed to the engine at W.O.T. The barrel will be fully open allowing as much air as permitted to enter from the choke side and flow into the engine.

WYK CARBURETORS WITH A HIGH SPEED ADJUSTMENT NEEDLE

Some WYK carburetors have a high speed needle to adjust the fuel flow delivered to the nozzle. High speed needle adjustment should be set between 1 1/4 turns open at the engine manufacturer's specified RPM.

High speed needle adjustment should be done after idle needle setting procedure is complete. Pre-set the high speed to 1 1/4 turns open to insure an initial rich setting.

Conclusion

I have compiled the information listed in the book over the last ten years. Some of it comes from the internet sites and forums. The majority comes from interacting with racers at the track. And, just like racing experience comes with time, this book will continue to grow as more information comes.

As I mentioned, this information comes from racers just like you and I from across the country that do their part in helping their fellow racers longevity in our hobby.

Take Care and Race Hard,

QSR